INSTRUMENT APPROACH CHART–ICAO

AD ELEV 171 FT
HEIGHTS RELATED TO
THR RWY 31 ELEV 155 FT

AMR	124.025
DSR	120.400
EFTA TWR	118.775

DUBAI/AL MAKTOUM INTL
ILS RWY 31
CAT A – B

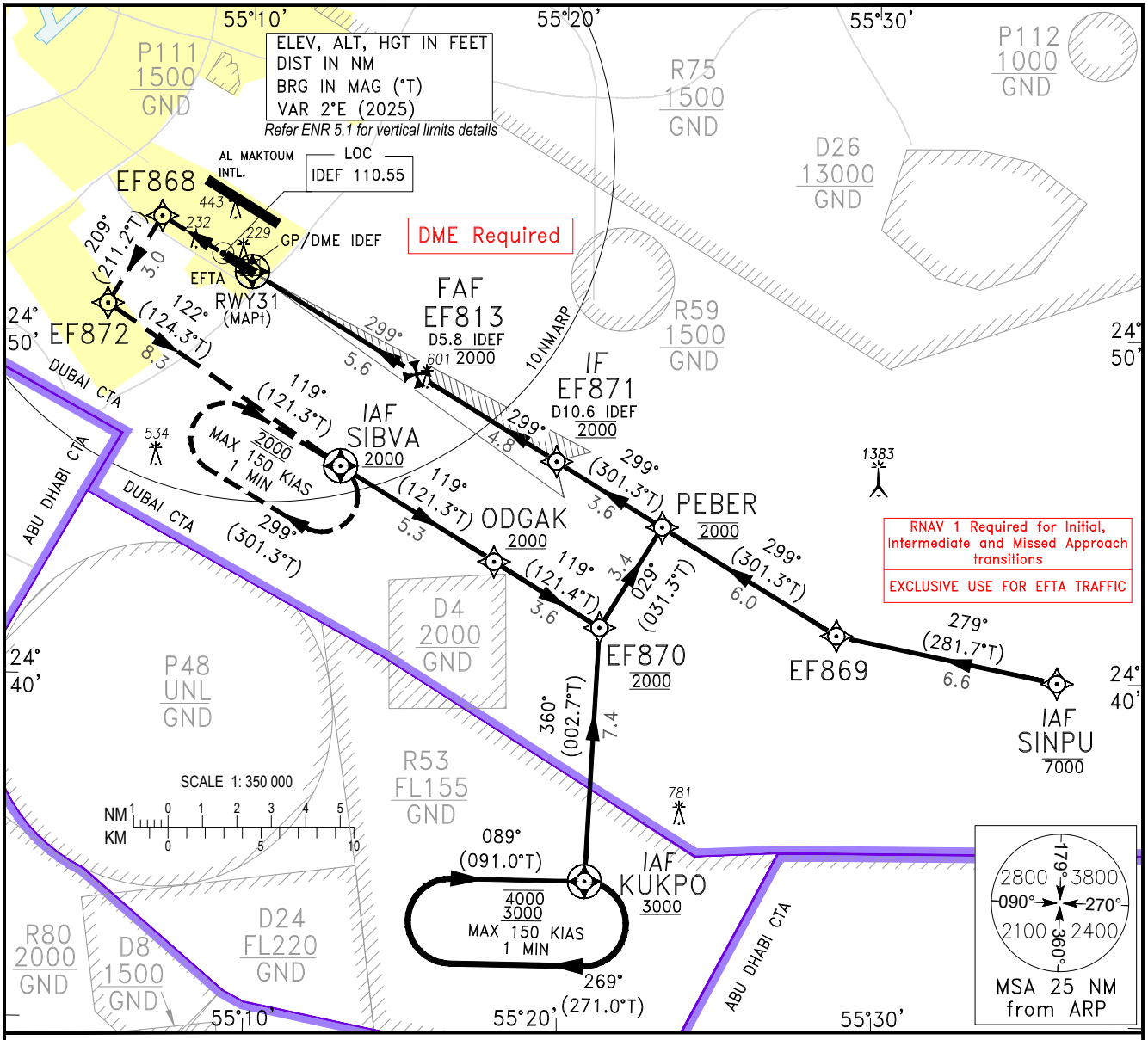

MISSED APPROACH:
Climb direct to EF868, then turn LEFT to EF872, then turn LEFT to SIBVA and hold at 2000'.
(MAX 130 KIAS for ALL turns)

TL FL150
TA 13000

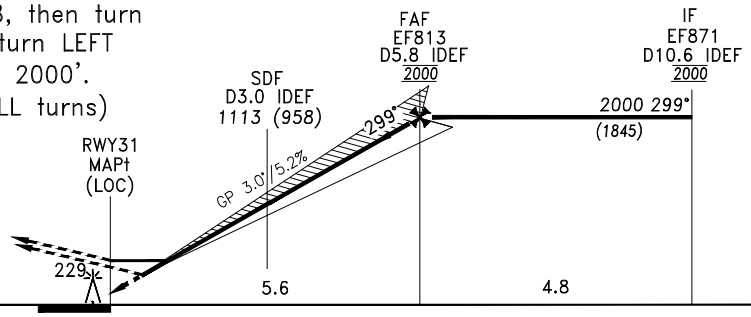

OCA/H		A	B
Straight-in Approach	ILS CAT I ①	360 (205)	372 (217)
	LOC	480 (325)	
Circling ②		740 (569)	

ILS CAT I MNM RVR 1000 M
LOC MNM RVR 1500 M
① MNM DH CAT I A, B – 270 FT
② Circling not authorised N of the RWY CL

No Circling

Distance from IDEF	NM	5.8	4.8	3.8	2.8	1.8	0.8
Altitude	FT	1990	1670	1350	1040	720	400
Ground Speed	KT	80	100	120	140		
Rate of Descent	FT/MIN	420	530	630	740		

CHANGES: Added QTE. Editorial.